Operator's Instructions

360° Rotator

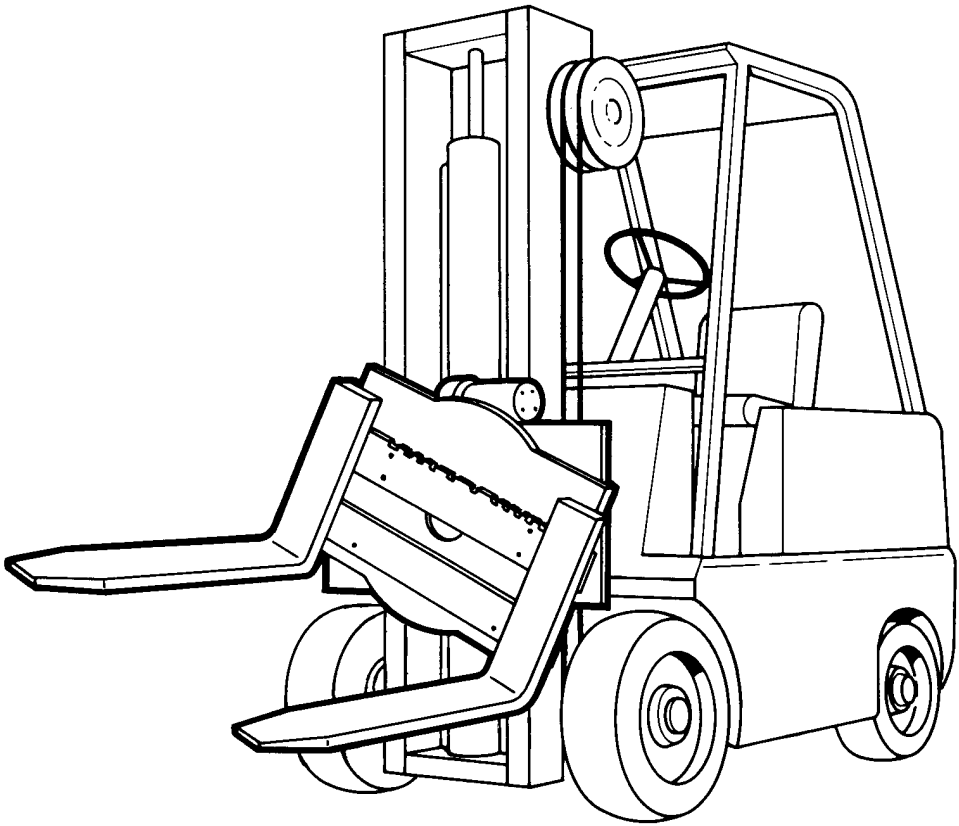

Manual Number 665710

cascade corporation

P.O. Box 20187 • Portland, Oregon 97220 • (503)666-1511

INTRODUCTION

These operating instructions cover Cascade 360° Rotator models R3R, R4R, R6R, and R7R. Before using the rotator on the job, determine which truck lever operates the rotator. Figure 1 will help you locate and identify lift truck and rotator components. For additional information on installation and servicing, refer to the Cascade 360° Rotator Service Manual.

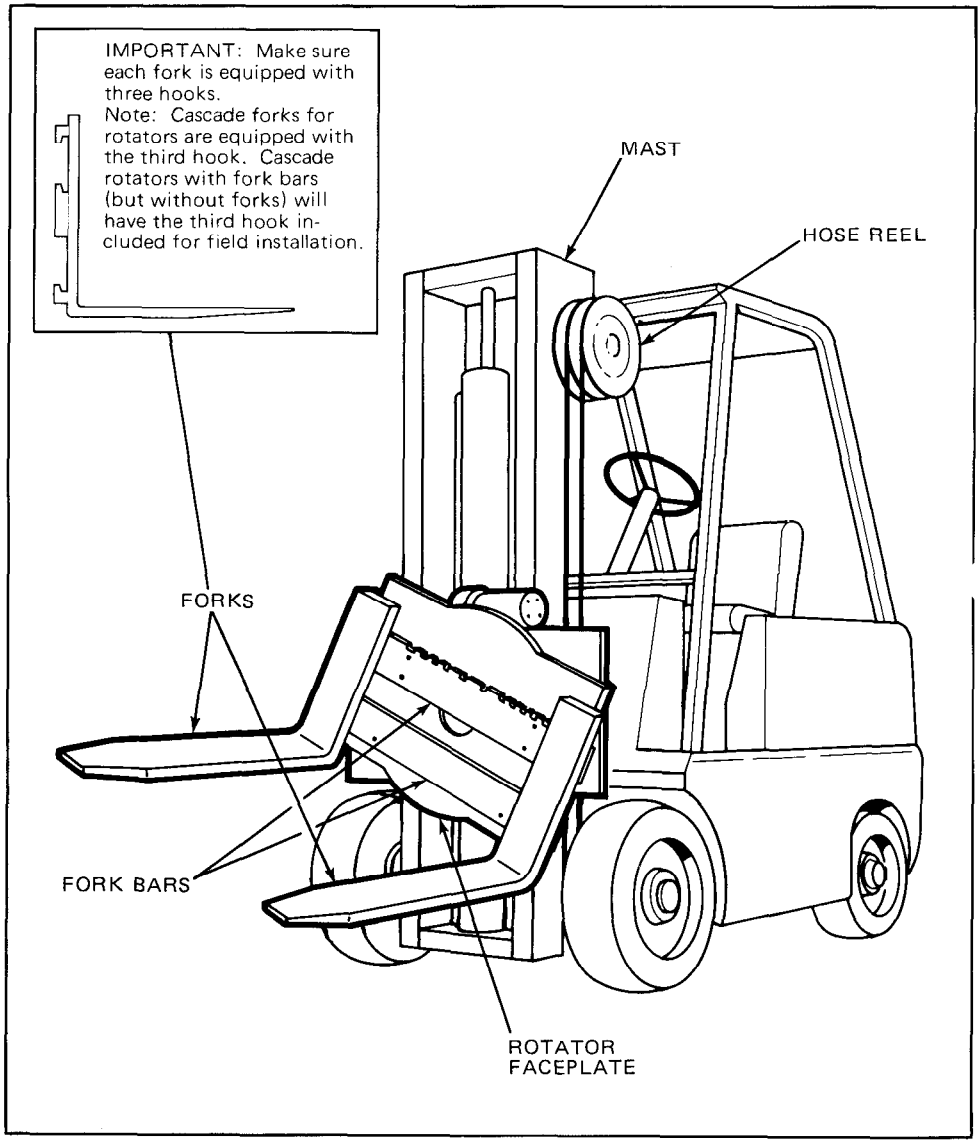

Figure 1. Lift Truck and Rotator Components

HOW TO INSTALL THE FORKS

1. Remove the fork keeper at one end of the carriage. See Figure 2.
2. Release the spring lock on the top of each fork as shown in Figure 2.
3. Slide the fork into position on the fork bars.

> ⚠ WARNING: Handle forks with care to avoid dropping on fingers or feet.

4. Lock each fork in place by pushing the lever down (see Figure 3), making sure the pin is engaged in the fork bar notch.
5. Install the fork keeper on the carriage.

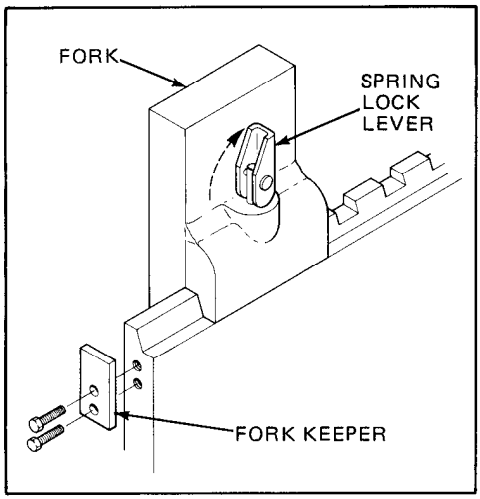

Figure 2 - Release the Spring Lock.

REPOSITIONING THE FORKS

1. Release the spring lock on the top of the fork by lifting the lever. See Figure 2.
2. Slide the fork to the desired position.
3. Lock the fork in place by pushing the lever down (see Figure 3). Make sure the pin is engaged in the fork bar notch.

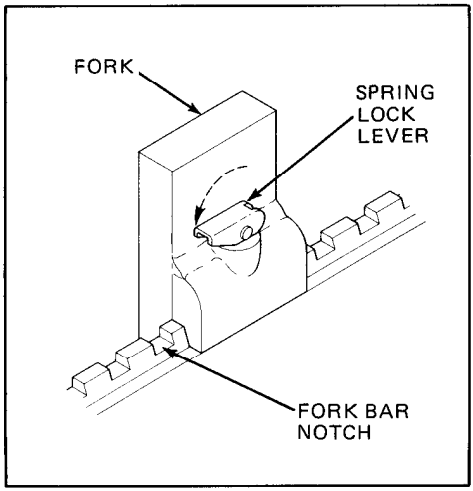

Figure 3 - Lock Fork in Place.

> **WARNING** ⚠
> - **Make sure the fork bars are horizontal when installing or repositioning the forks.**
> - **Make sure the fork keepers are in place and secured on both ends of the carriage.**
> - **Always make sure the spring lock lever is engaged on each fork.**

OPERATION

1. Before going on the job, operate the truck control levers to determine which one operates the rotator and in which direction. The truck rotate lever should conform to the industry standard practice as shown in the chart below. If it does not, check with your foreman or supervisor.

Direction of Rotation (as viewed from the driver's seat)	**Motion of Operator's Hand**
Clockwise	Rearward or Up
Counterclockwise	Forward or Down

2. Make sure the rotator moves smoothly throughout its rotation, without binding or pinching hoses. Avoid rapid or jerky rotation especially when the rotator is loaded.
3. If the rotator is not operating properly, **do not take it on the job.** Check with your supervisor about needed repairs.

⚠ warning

- Never carry a load greater than the rated capacity for the truck/rotator combination. NOTE: The rated capacity for the truck/rotator combination is a responsibility of the original truck manufacturer and may be less than that shown on the rotator nameplate. Check the truck nameplate.
- Make sure the total capacity of the forks is equal to or greater than the load. Capacity is stamped on each fork. Determine total capacity by adding each fork capacity together.
- Use extreme caution when rotating a load near people. Too fast a rotation could cause articles being dumped to fly out of the box.
- Rotate slowly in elevated positions. Too fast a rotation can affect truck stability.
- Set a load down with the forks parallel to the floor.

OPERATOR TECHNIQUES

- Make sure the container you are rotating has fork slots to prevent dropping the container when rotating.

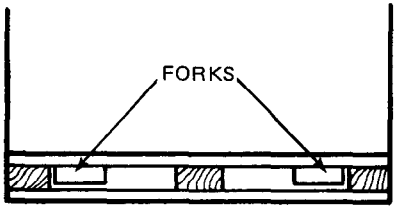

THIS

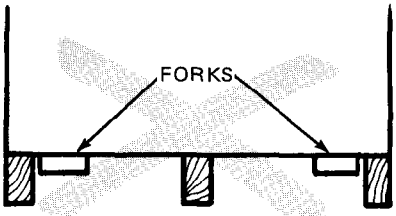

NOT THIS

- Space the forks as shown below, to prevent slippage of the load during rotation.

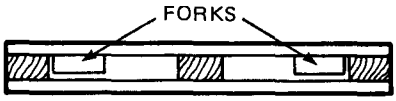

THIS

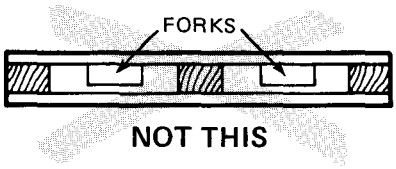

NOT THIS

- Place the forks completely under the load with the load against the forks.

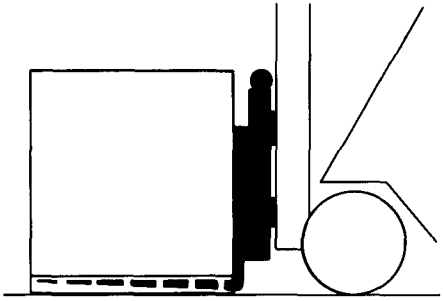

THIS

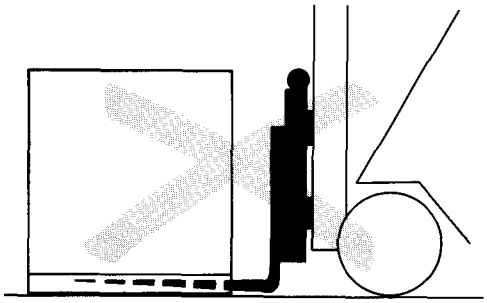

NOT THIS

OPERATOR TECHNIQUES, cont.

- Make sure the load is horizontal before rotating. NOTE: On rotators with 4° mounting, the mast will have to be tilted back until the load is horizontal.

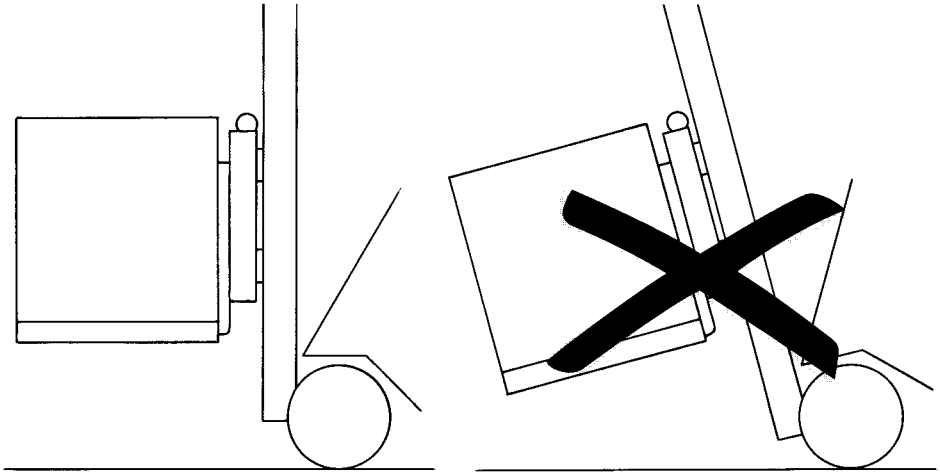

THIS NOT THIS

- Make sure you have enough ground clearance **and** overhead clearance before rotating the load.

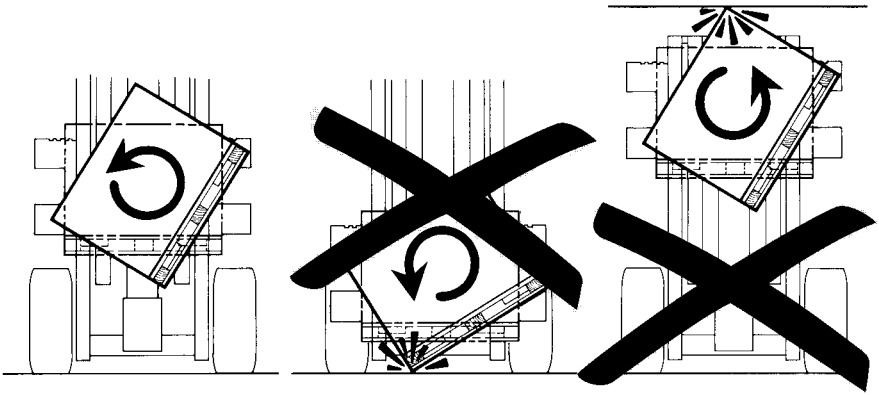

THIS NOT THIS NOT THIS

SAFETY FIRST

- Operator must be properly trained and qualified.
- Drive carefully and observe traffic rules. Be in full control of the truck at all times. Avoid ruts, bumps and other hazards that may cause the truck to swerve or tip.
- Travel slowly around corners. Sound horn on blind corners. Be careful of tail swing and overhead clearances. Watch where you are going, whether in forward or reverse. Avoid sudden stops and starts.
- Never leave a lift truck unattended without lowering the load, setting the brake, and turning the truck off.
- Do not allow riders on the forks or truck at any time.
- Never allow anyone under a load or under the carriage.
- Never reach through the mast. Keep all parts of your body inside the driver's compartment.
- Transport a load with the forks lowered to 3 to 4 inches above the floor and the mast tilted back.
- Limit the amount of truck maneuvering to a minimum when high-stacking a load.
- Report all damaged or faulty equipment. Do not operate a lift truck until repairs have been made.
- Do not turn on an incline. Aways back down ramps or inclines. Driving forward with a load, down a ramp or incline, will reduce the truck's stability.
- If in doubt about any procedure in this book, ask your supervisor.

© Cascade Corporation 1978

VGP 3M 10/78 Part No. C-665710 Litho in U.S.A. Form 5167